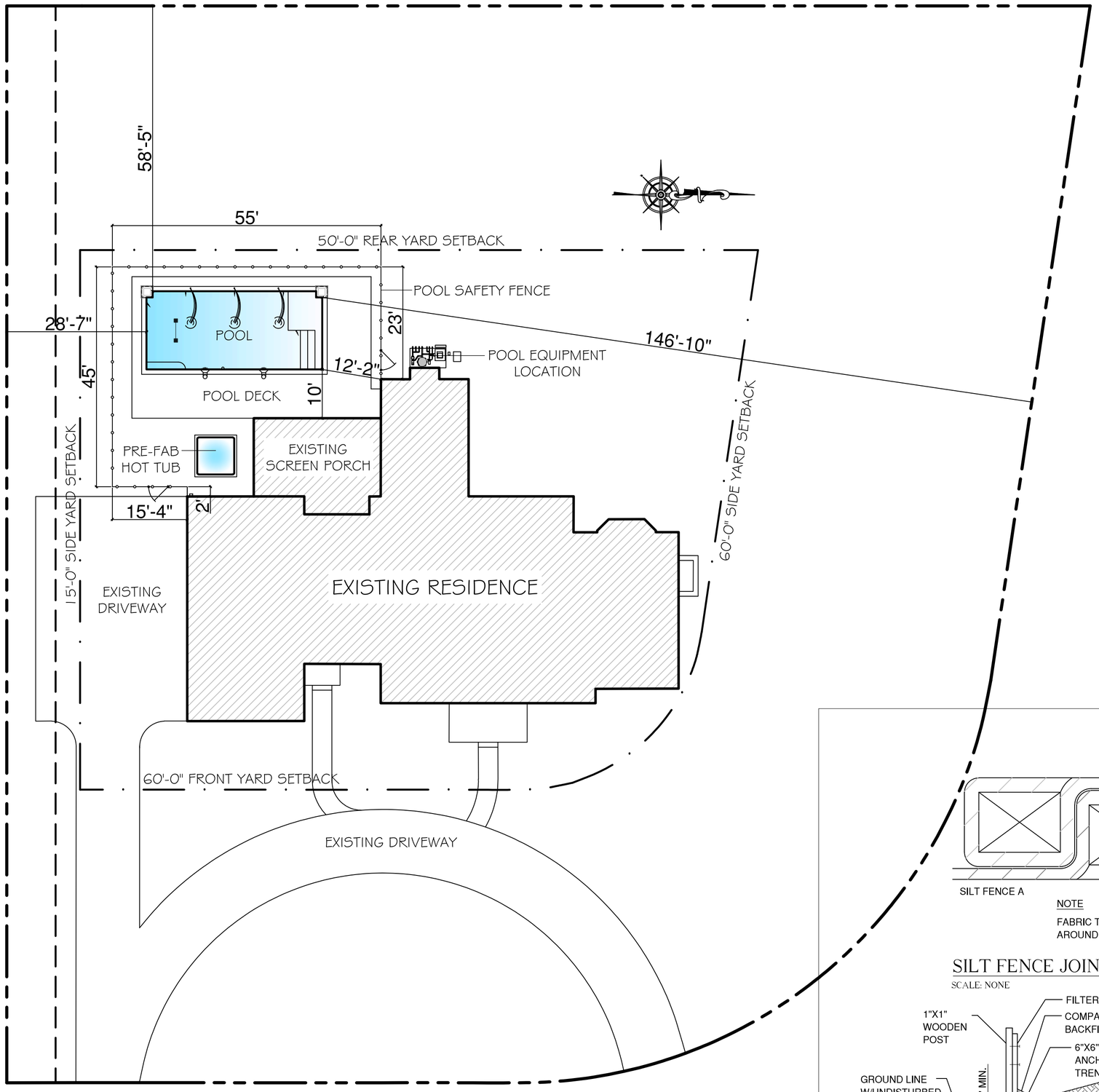

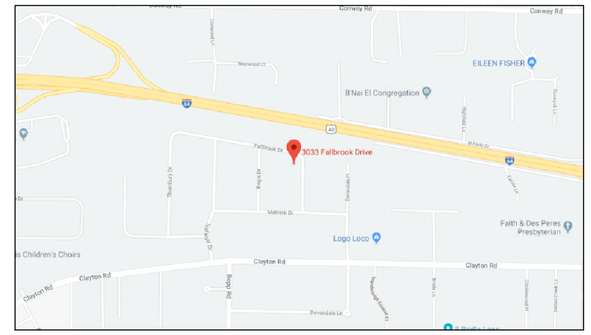

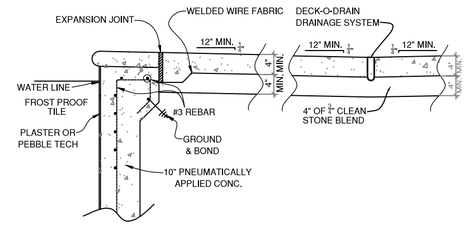

TYP. SECTION @ CONC. DECK

SCALE: NONE

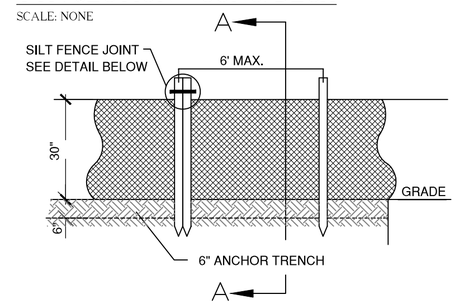

SILTATION CONTROL DETAIL

SCALE: NONE

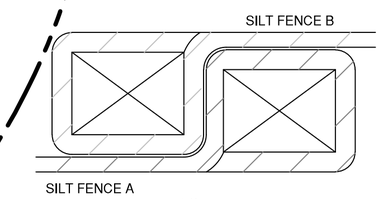

NOTE

FABRIC TO BE WRAPPED AROUND FENCE POST

SILT FENCE JOINT DETAIL

SCALE: NONE

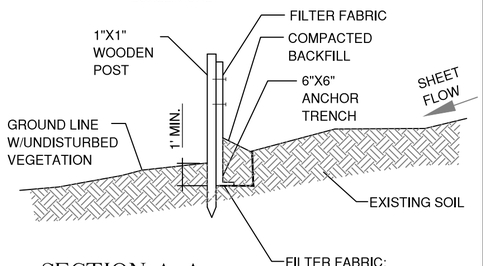

SECTION A-A

SCALE: NONE

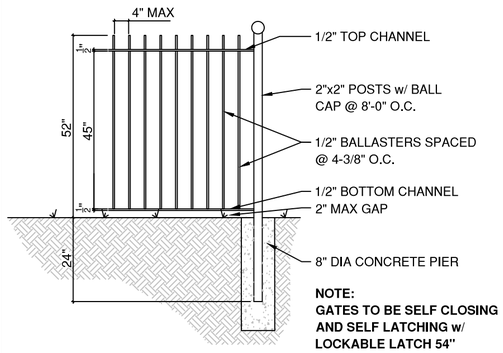

NOTE:
GATES TO BE SELF CLOSING AND SELF LATCHING w/ LOCKABLE LATCH 54" ABOVE FINISHED GRADE

FENCE DETAIL

SCALE: NONE

Missouri One Call System, Inc.
Call Before You Dig!
1-800-DIG-RITE
(1-800-344-7483)

All the improvements & facilities and utilities, above ground and underground shown herein were plotted from available information and do not necessarily reflect the actual existence, nonexistence, elevation, size, type, number or location of these or other improvements, facilities, or utilities. The General Contractor and/or owner shall be responsible for verifying the actual location & elevation of all improvements, facilities, & utilities, shown or not shown, and said improvements, facilities, & utilities shall be located in the field prior to any grading, excavation or construction of any improvements. These provisions shall in no way absolve any part from complying with the Underground Facility Safety & Damage Prevention Act, Chapter 319, RSMo.

CALL MISSOURI ONE-CALL, 1-800-DIG-RITE

CUSTOM DESIGN FOR:

THE KOON RESIDENCE
3033 FALLBROOK
FRONTENAC, MO 63131

SWIMMING POOL SERVICE & CONSTRUCTION

11766 MISSOURI BOTTOM RD.
ST.LOUIS, MO. 63042
TEL: (314)731-0055 FAX: (314)731-2178

THE POOL SPECIALISTS,INC.

SITE PLAN

©2019 THE POOL SPECIALISTS
THIS PLAN AND ALL COPIES ARE THE SOLE PROPERTY OF THE POOL SPECIALISTS AND ARE FOR USE ONLY ON THIS PROJECT. ANY USE OF THESE DESIGNS IN WHOLE OR IN PART WILL RESULT IN DESIGN AND DRAFTING CHARGES

ENGINEER: DATE:

DATE	11.26.19
SCALE	1/16"=1'-0"
FILE #:	
SUPERVISOR:	
DRAWN BY:	db

2 OF: 3